Technical Information

Lifting pump versions SFL | SBF

Lifting Pumps SFL

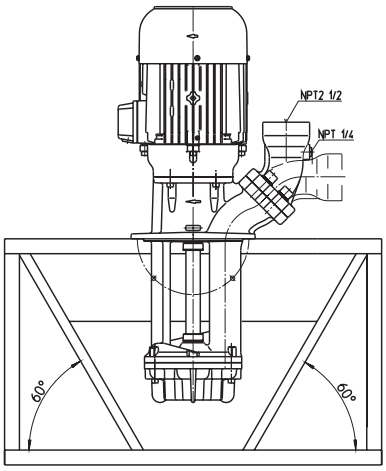

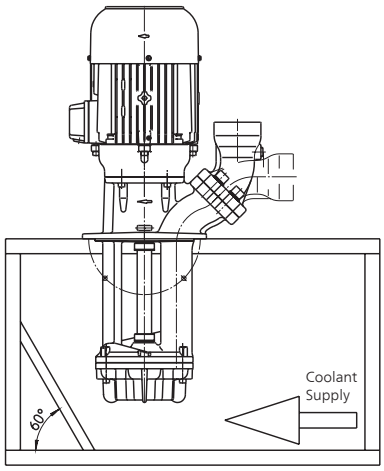

The SFL pump series represents an innovative lift pump concept which has found many pumpback applications world wide. The SFL pumps series can be customized through various options and upgrades.

Properly planned system and tank design allow for the possibility to use the **SFL** and **SFC Cutter pumps** interchangeably within the same tank in order to ensure maximum flexibility with respect to being able to react to changing machining materials or different chip geometries.

	Impeller material	Inlet cover material	Slurping mode	Chip handling capabilities	Max. chip to coolant ratio by weight
SFL...Standard	cast steel	special cast iron	yes	colored metal, aluminum, cast iron	1%
SFL...CM1	CrMo	special cast iron	yes	steel, medium alloyed steel	1%
SFL...CM3	CrMo	CrMo	yes	forged materials high alloyed steels hardened steels	1%
SFL...CM4	CrMo	CrMo	yes	forged materials high alloyed steels hardened steels	1%

Type	Chip diameter Inch / mm	Chip length Inch / mm
SFL550	0.3 / 8	0.6 / 15
SFL650	0.3 / 8	0.6 / 15
SFL850	0.4 / 10	0.8 / 20
SFL1150	0.6 / 15	1.18 / 30
SFL1350	0.6 / 15	1.18 / 30
SFL1550	0.6 / 15	1.18 / 30
SFL1850	0.6 / 15	1.18 / 30
SFL2350	1.0 / 25	1.97 / 50

We gladly support you regarding any questions on pump regulation and control. A „saw-tooth operation“ with two different pump speeds might just be the perfect solution for you.

Lifting Pumps SBF

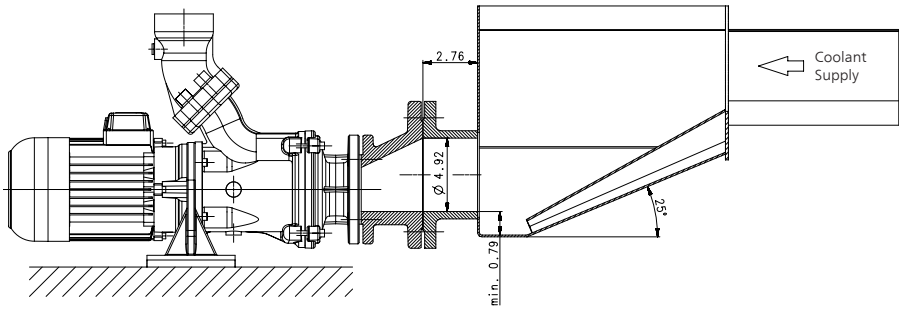

SBF pumps are comparable to SFL pumps from a technical standpoint. These pumps can be mounted directly to the machine and are available upon request with upgraded materials of construction which allow for unlimited dry-running (double mechanical seal).

Properly planned system and tank design allow for the possibility to use **SBF** and **SBC cutter pumps** interchangeably within the same tank by only adding an adapter flange.

Option:

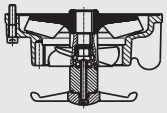

SFL and **SBF pumps** are also available with an additional agitator at the pump suction. The agitator can either be supplied directly with the pump assembly or is available as a separate component for installation in the field at a later date.

All information stated above is only intended as a general guide line for your system layout. Prior to placing your order please consult with our sales team regarding your specific application in order to ensure proper pump selection.

Technical Information

Lifting pump versions SFC | SBC

Cutter Pumps SFC

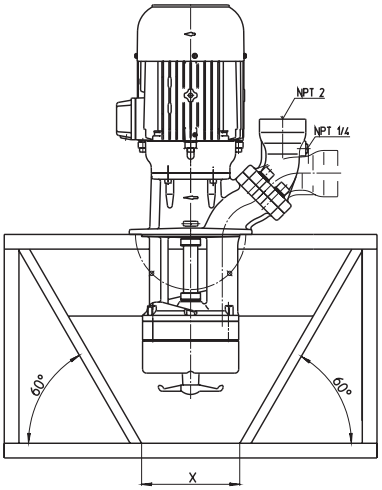

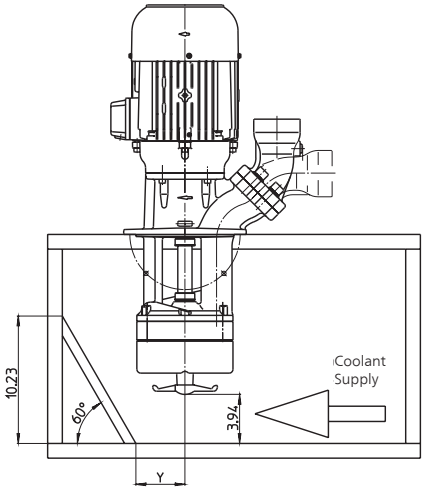

Unique Features of the SFC series:

- Oversized motor to transfer additional cutting forces via the driving shaft
- Axial impeller optimized for the cutting process
- Dry running capability
- Adjustable gap between both cutting blades for preventative maintenance
- Maintenance free and shock absorbing bearing bushing

Type	X Inch / mm	Y Inch / mm
SFC620	5.51 / 140	2.76 / 70
SFC820 **SFC1120**	7.87 / 200	3.94 / 100
SFC1520 **SFC1820** **SFC2320**	10.83 / 275	5.5 / 140

The cutter pumps of the series SFC are suited for cutting aluminum chips or similar materials and for pumping these materials along with the coolant fluid. An agitator located at the pump suction helps to break up and separate any large bundles of chips or bird's nests which reach the pump suction.
The hardened cutting unit (>60HRC) is cutting chips and the semi-open impeller with its large clearances allows to pump the particles along with the coolant fluid from the machine back to the filter. The SFC pumps are capable of handling chip to coolant ratios of up to 1.5% by weight.
The cutter pump is equipped with a maintenance free shock absorbing bushing which has outstanding dry running capabilities.

Instead of cycling the pumps, the SFC pumps should be run continuously in order to prevent chips from entering the back plane of the impeller and clogging the pump.
The agitator must be located 4 inches (100 mm) above the tank bottom in order to prevent unwanted objects, such as broken tools or indexing plates, from entering the pump suction.
The walls of the tank around the pump should be sloped at a 60 degree angle to avoid chips from collecting at the tank bottom. The coolant supply should be aimed directly at the pump to ensure that all contamination, including chip bundles, reach the pump suction (please refer to the above tank design as a guide line for your tank layout).

Cutter Pumps SBC

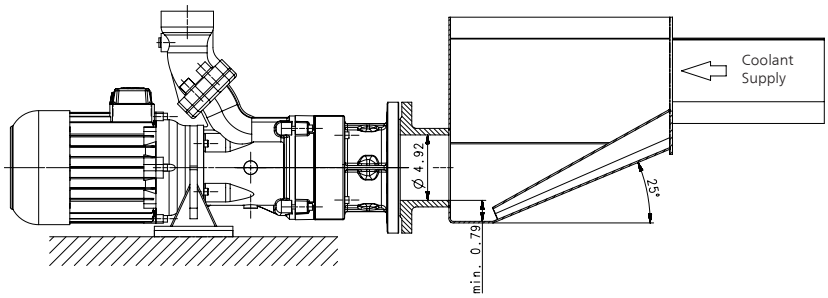

SBC pumps are comparable to SFC pumps from a technical standpoint. When directly mounted to the tank or to the machine tool preventive actions must be taken in order to avoid unwanted foreign objects, such as broken tooling pieces, from reaching the pump suction.

All information stated above is only intended as a general guide line for your system layout. Prior to placing your order please consult with our sales team regarding your specific application in order to ensure proper pump selection.

Technical Information

Lifting pump versions SXC | SPC

Cutter Pumps SXC | SXC-R | SXC-H

SXC

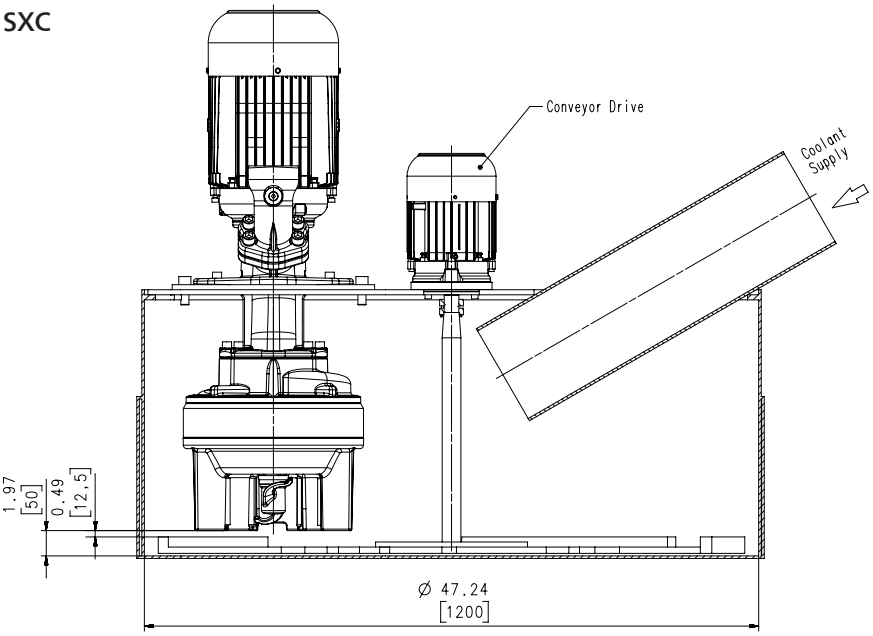

SXC-R

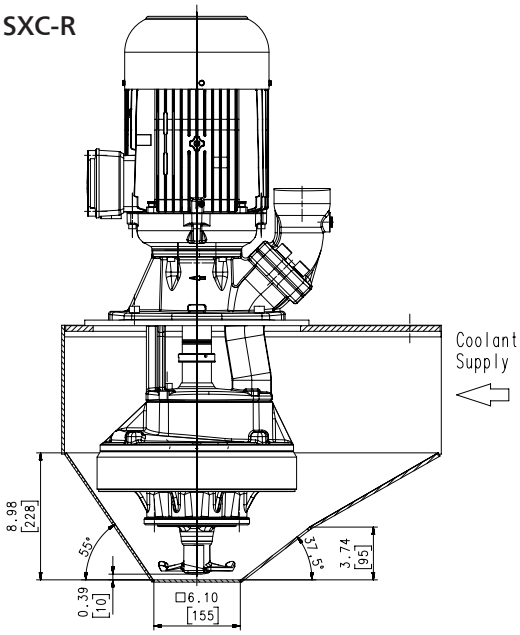

The cutter pumps of the series SXC are designed to handle low alloyed steels, machining steel (SXC-H) and cast iron / aluminum combinations (SXC). Chips can also be in the shape of birds nests or chip bundles.

The chips must be supplied to the suction inlet of the pump, which are then picked up by the agitator broken up if necessary, and then cut and delivered by the pump.

In the case of brittle chips, such as cast iron rings, the SXC-R pump, which has an agitator that is capable of picking up the chips of the tank bottom, is to be applied.

Proper tank design which ensures that all chips get to the pump suction is critical for all pump types.

Due to the complexity of this application we recommend to consult with our technical application specialists in order to ensure the proper pump selection.

Cutter Pumps SPC

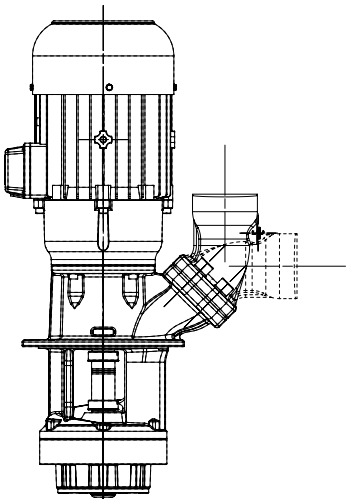

The cutter pumps of the series SPC are designed to handle and reliably cut long, stringy plastic chips.

Because of the higher number of cutting blades which results in an increased cutting frequency all chips are being consistently cut in small pieces.

All information stated above is only intended as a general guide line for your system layout. Prior to placing your order please consult with our sales team regarding your specific application in order to ensure proper pump selection.

Lifting pump versions SFT

Vortex Pumps SFT

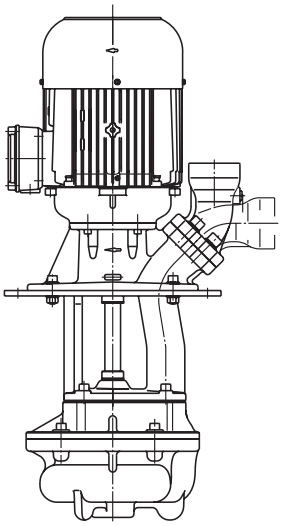

Vortex pumps are traditional lift pumps with a recessed impeller that allows for a sphere passage of up 50 mm. In order to ensure stable operating conditions the impeller must be fully flooded, and the pump must lift the fluid at least 10–25 inch (3–8 m) above the pump discharge.

	Impeller material	Inlet cover material	Shaft bushing	Max. chip to coolant ratio by weight	sphere size passage Inch / mm	Chip handling capabilities
SFT450 **SFT710** **SFT1100**	Cast steel	Special cast iron	SIC/SIC	1.5%	1.97 / 50	colored metal aluminum cast iron steel alloyed steel hardened steel forged steel
SFT1300 **SFT1350** **SFT1400** **SFT2254** **SFT3054** **SFT3554**	Cast steel	Special cast iron	Cartridge	1.5%	1.77 / 45	
SFT1554-C	Cast steel	Special cast iron	Cartridge	1.5%	1.57 / 40	

All information stated above is only intended as a general guide line for your system layout. Prior to placing your order please consult with our sales team regarding your specific application in order to ensure proper pump selection.